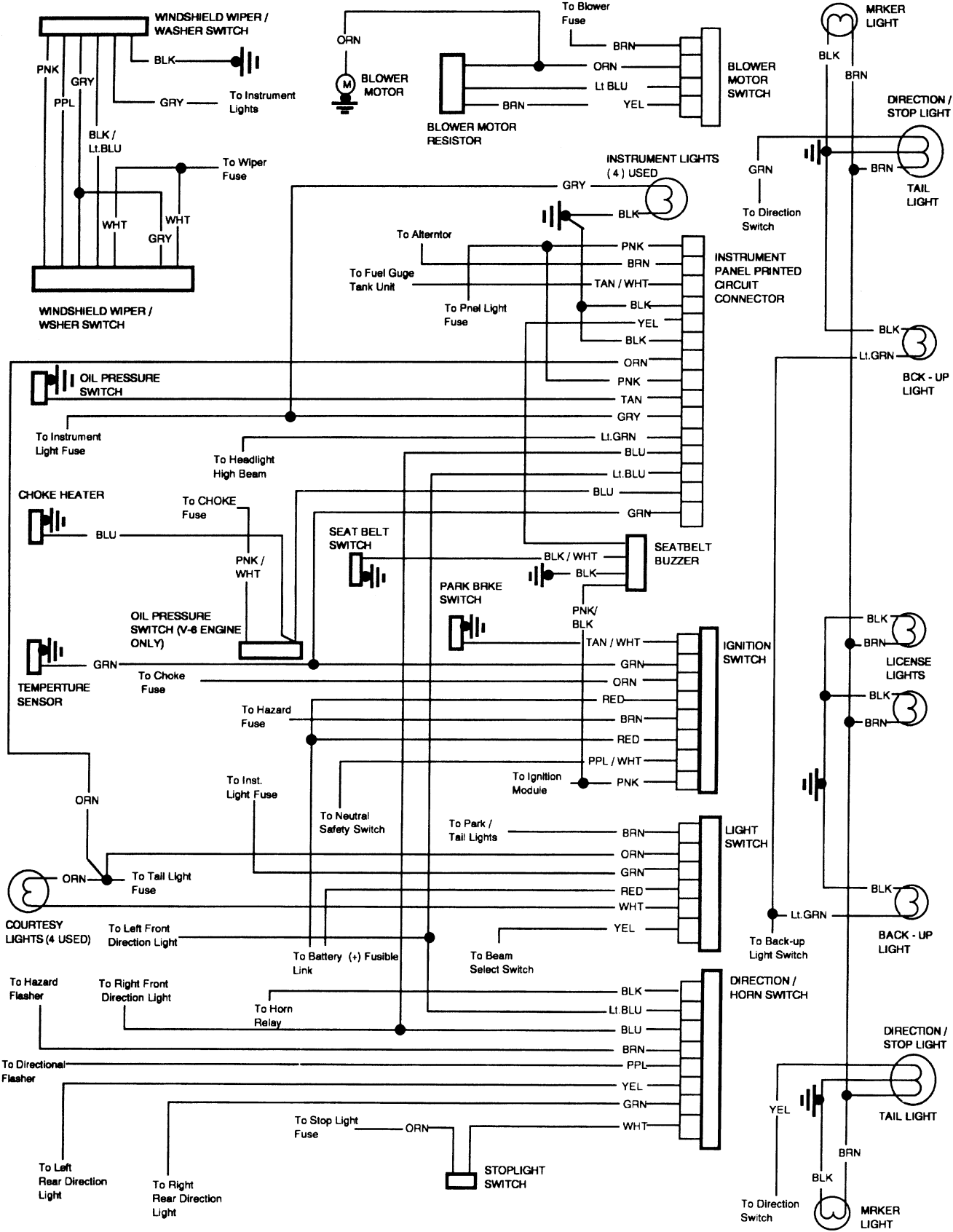
WINDSHIELD WIPER / WASHER SWITCH
PNK
GRY
PPL
BLK
GRY
To Instrument Lights
BLK / Lt.BLU
To Wiper Fuse
WHT
WHT
GRY
WINDSHIELD WIPER / WSHER SWITCH
ORN
BLOWER MOTOR
To Blower Fuse
BLOWER MOTOR RESISTOR
BRN
ORN
Lt BLU
BRN
YEL
BLOWER MOTOR SWITCH
MRKER LIGHT
BLK
BRN
DIRECTION / STOP LIGHT
GRN
BRN
TAIL LIGHT
To Direction Switch
INSTRUMENT LIGHTS (4) USED
GRY
BLK
To Alternator
PNK
BRN
To Fuel Guge Tank Unit
TAN / WHT
To Pnel Light Fuse
BLK
YEL
BLK
INSTRUMENT PANEL PRINTED CIRCUIT CONNECTOR
BLK
Lt.GRN
BCK - UP LIGHT
OIL PRESSURE SWITCH
ORN
PNK
TAN
GRY
To Instrument Light Fuse
Lt.GRN
BLU
To Headlight High Beam
Lt.BLU
BLU
GRN
CHOKE HEATER
BLU
To CHOKE Fuse
PNK / WHT
SEAT BELT SWITCH
BLK / WHT
BLK
SEATBELT BUZZER
PARK BRKE SWITCH
PNK/ BLK
OIL PRESSURE SWITCH (V-6 ENGINE ONLY)
TAN / WHT
IGNITION SWITCH
BLK
BRN
LICENSE LIGHTS
GRN
TEMPERTURE SENSOR
To Choke Fuse
GRN
ORN
RED
To Hazard Fuse
BRN
RED
BLK
BRN
PPL / WHT
To Ignition Module
PNK
ORN
To Inst. Light Fuse
To Neutral Safety Switch
To Park / Tail Lights
BRN
ORN
GRN
RED
WHT
YEL
LIGHT SWITCH
ORN
To Tail Light Fuse
COURTESY LIGHTS (4 USED)
To Left Front Direction Light
To Battery (+) Fusible Link
To Beam Select Switch
BLK
Lt.GRN
To Back-up Light Switch
BACK - UP LIGHT
To Hazard Flasher
To Right Front Direction Light
To Horn Relay
BLK
Lt.BLU
BLU
BRN
PPL
YEL
GRN
WHT
DIRECTION / HORN SWITCH
DIRECTION / STOP LIGHT
To Directional Flasher
YEL
TAIL LIGHT
To Stop Light Fuse
ORN
STOPLIGHT SWITCH
BRN
BLK
To Left Rear Direction Light
To Right Rear Direction Light
To Direction Switch
MRKER LIGHT