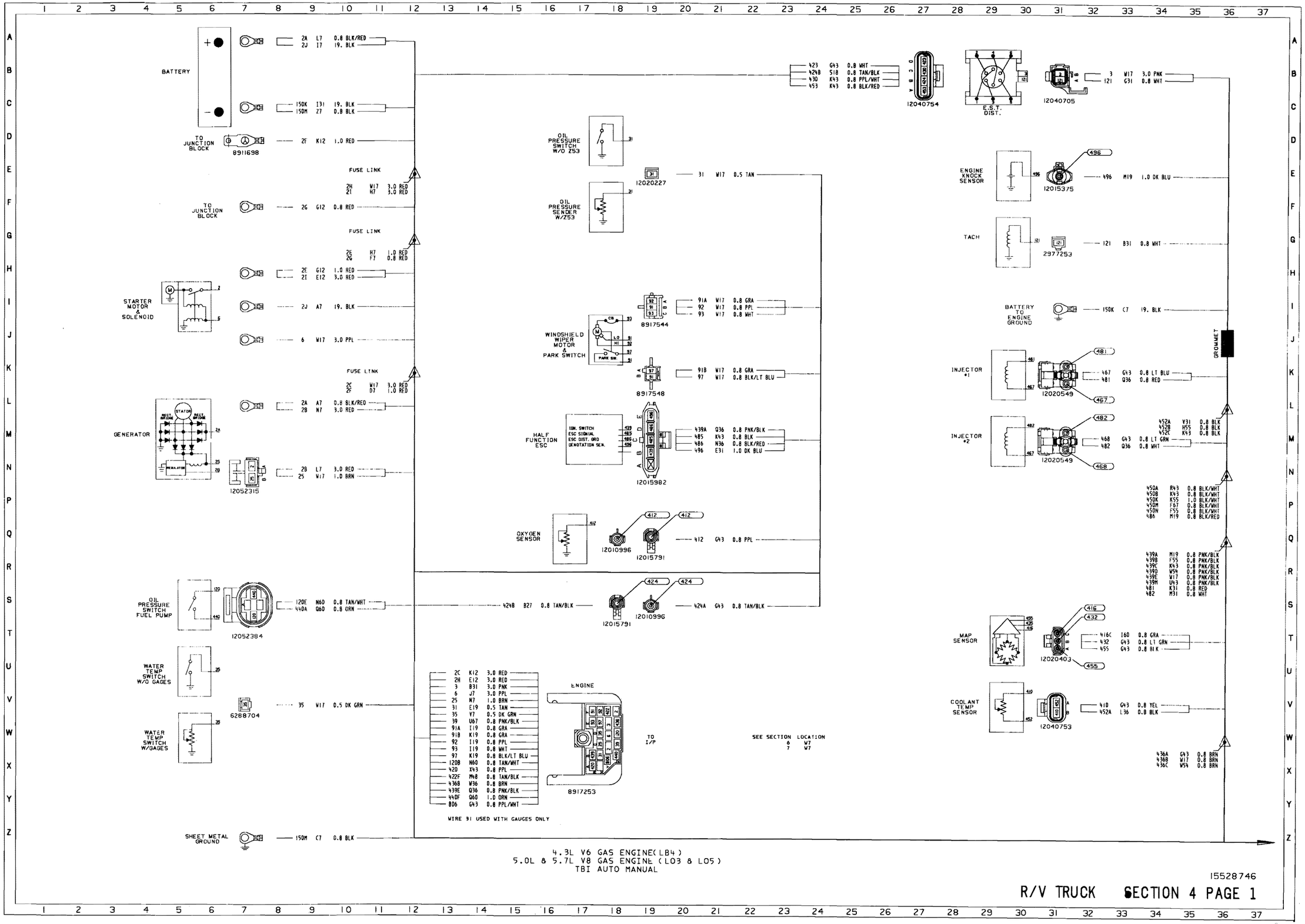

4.3L V6 GAS ENGINE(LB4)
5.0L & 5.7L V8 GAS ENGINE (L03 & L05)
TBI AUTO MANUAL

15528746