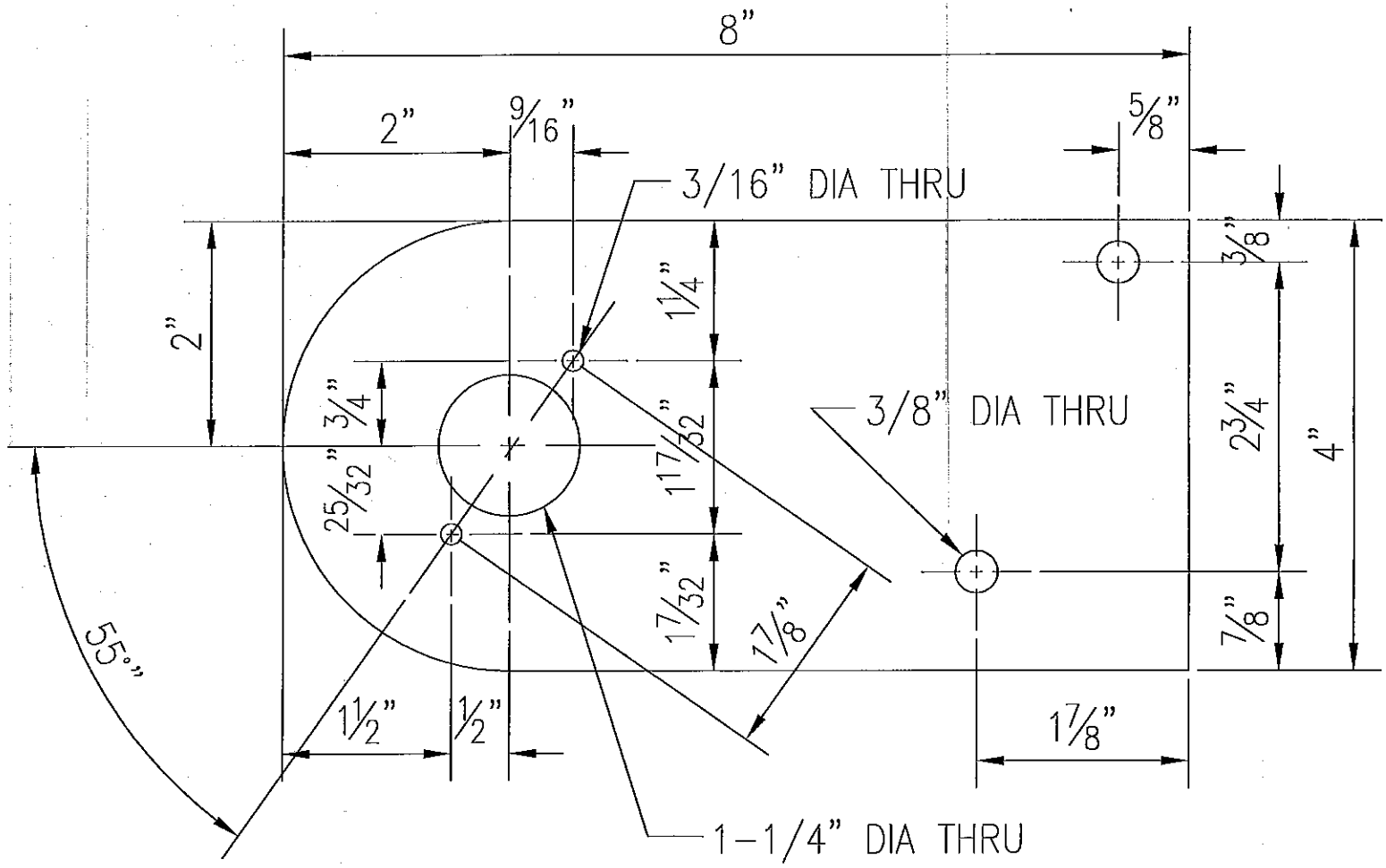
8"
2"
9/16"
5/8"
3/16" DIA THRU
3/8" DIA THRU
1-1/4" DIA THRU
2"
3/4"
25/32"
1 1/4"
1 17/32"
1 7/32"
1 7/8"
3/8"
2 3/4"
4"
7/8"
1 1/2"
1/2"
1 7/8"
55°"